Roof bar kit ID. Buzz Cargo 22-, 2 bars

MODUL-SYSTEM **RR560023000**

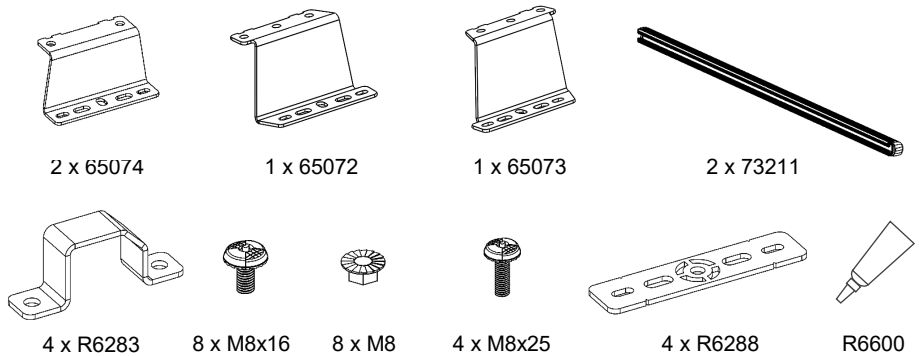

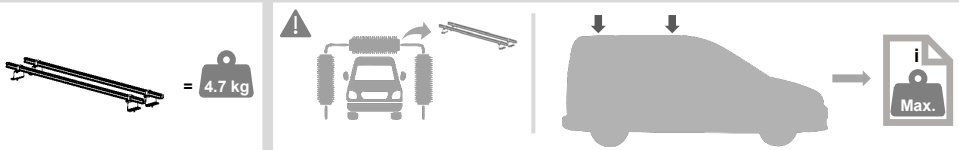

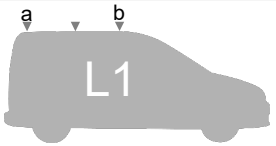

1

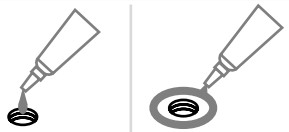

a

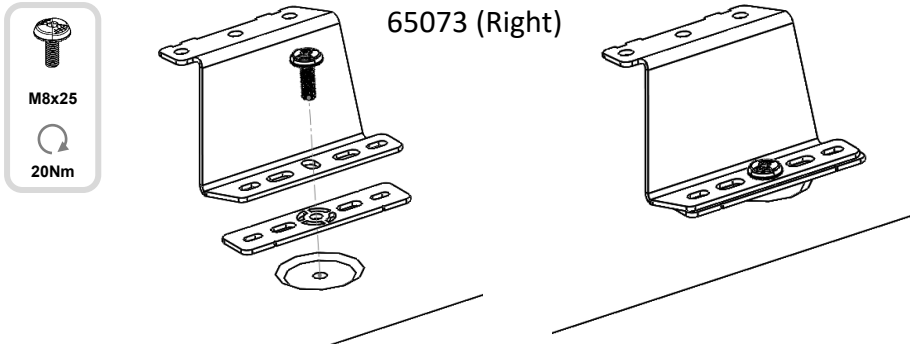

b

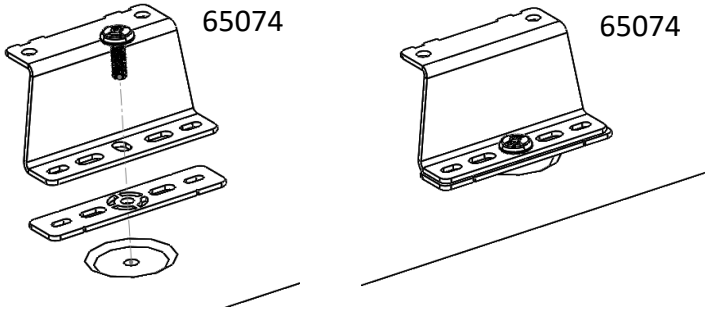

2

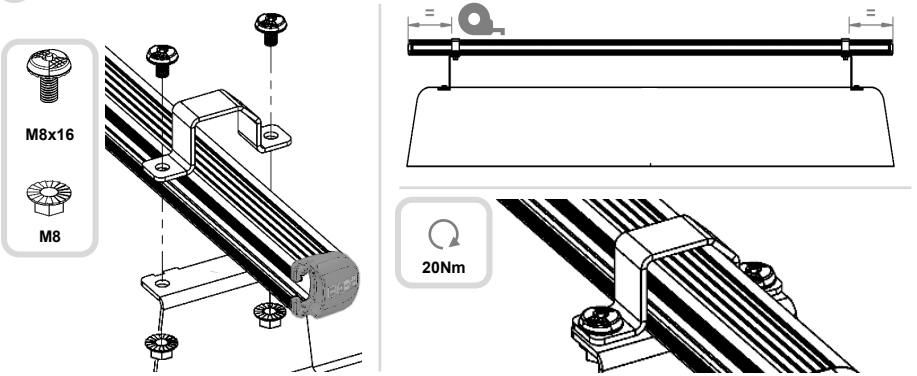
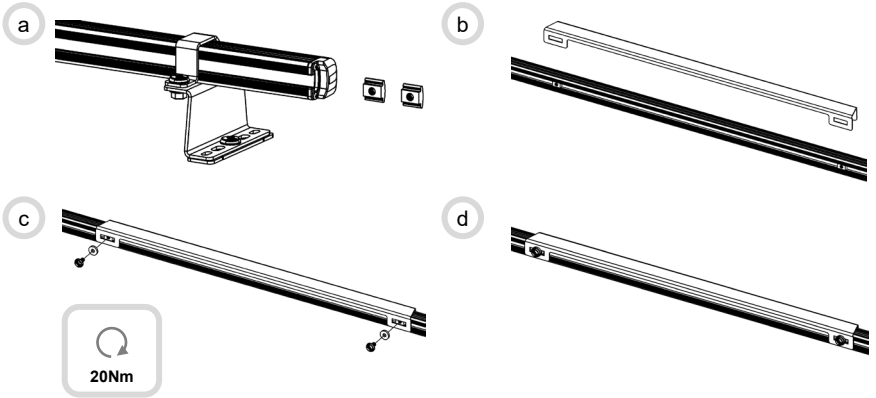
3